A 150 µm Liquid Layer.
A New Frontier in Liquid Analysis.



Liquid Samples at This Scale

Ultra-Thin
Liquid Sample Layer

Approx. **150 µm**

Large Observation Area

ø14 mm

MiMOi® CELL

Precision Cell with Disposable Convenience

MiMoi CELL is a transparent, disposable COP cell for liquid samples. The cell offers cleaning-free convenience while supporting spectroscopic analysis high reproducibility.

- **Precisely Formed Liquid Layer of Approx. 150 µm**
  Two precision-bonded COP plates help reduce variation in liquid layer thickness.
- **Large 14 mm-Diameter Observation Area**
  The wide-field design makes it easier to visually assess the condition of liquid samples.
- **Suitable for a Wide Range of Liquid Samples**
  The cell is made of COP with good chemical resistance. Highly viscous samples can also be injected by syringe.
- **Cleaning-Free Disposable Design**
  The disposable design helps reduce cross-contamination risk between samples, as well as the workload associated with cleaning.



Dimensions

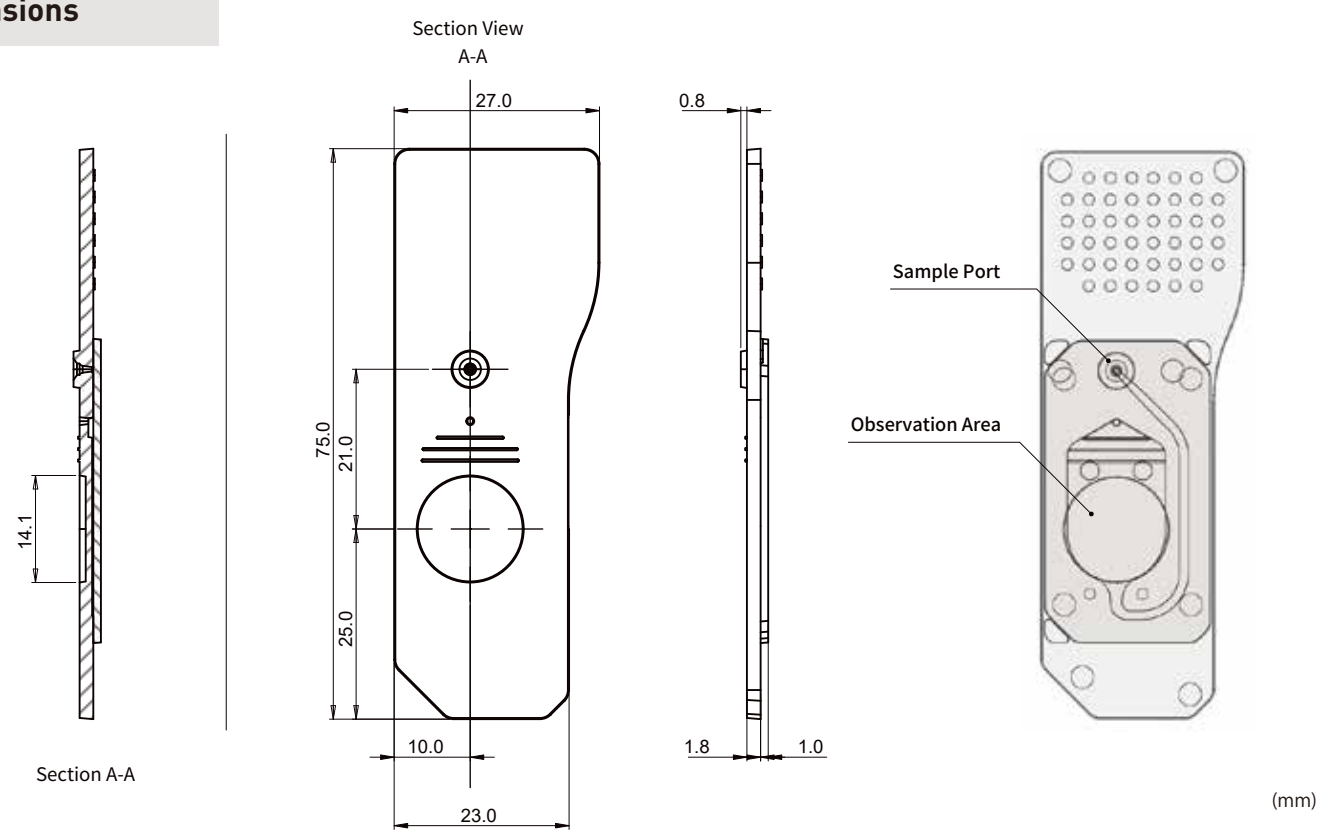

(mm)

Specifications

Product Name	MiMoi CELL
Applications	Visual inspection and photographic documentation of liquid samples (color, dispersion, etc.) Spectroscopic analysis
Material	COP (cyclo olefin polymer), non-sterile, no mold release agents used
Optical Properties	High optical transmittance and low autofluorescence inherent to COP
Adsorption Properties	Low adsorption (helps reduce nonspecific adsorption of proteins and particles)
Chemical Resistance	Good resistance to alcohols, acids, and alkalis
Compatible Tools for Liquid Sample	Micropipette / Tip: NICHIRYO Premium Tip (2–200 µL) | Syringe / Needle: 17 G
Sample Volume	Approx. 50 µL
Storage Conditions	Store at room temperature. Avoid extremely high or low temperatures.
Liquid Layer Thickness	147 ± 7 µm *1

Product Lineup

	Standard	Premium	Premium Plus
Cell-to-Cell Thickness Variation *2	±5µm	±3µm	±1µm
Within-Cell Thickness Variation *3	≤ 6µm		≤ 3µm
Thickness Data Provided	Not Included	Liquid Layer Thickness	Liquid Layer and COP Plate Thicknesses
Observation Area	Approx. ø14 mm		
Cells per Package	10		

Thickness measurements at 9 points within the central ø9 mm area of each cell.
*1 Mean of the thickness measurements taken at 9 points within each cell.
*2 Difference between the liquid layer thickness of each cell and the mean of the liquid layer thicknesses of all cells in the package.
*3 Difference between the maximum and minimum liquid layer thicknesses measured at 9 points within each cell.

S-TAKAYA ELECTRONICS INDUSTRY CO., LTD.
HQ： 3121-1 Satomi, Satosho-cho, Asakuchi-gun,
Okayama Prefecture 719-0301, Japan
TEL : (+81) 865-64-4131 FAX : (+81) 865-64-4474
https://www.s-takaya.co.jp

"MiMoi" is a registered trademark of S-TAKAYA ELECTRONICS INDUSTRY CO., LTD. (Registration No. 6034122).