Specifications

Spectroscopic Technique	Terahertz Time-Domain Spectroscopy
Measurement Data	Time-Domain THz Electric Field Waveform
Measurement Frequency Range	0.2–2 THz
Dynamic Range	Under Evaluation
Frequency Resolution	0.1 THz
Emitter / Detector	Photoconductive Antenna / Photoconductive Antenna
Measurement Configuration	Transmission
Controller	External PC
Data Outputs	Time-Domain THz Electric Field Waveform (CSV) Frequency-Domain Data after Fourier Transformation (CSV) Absorbance Spectrum (CSV) Sample Chamber Temperature (CSV)
Analysis and Display Functions	Power Spectrum, Absorbance, and Transmittance
Excitation Light Source	Femtosecond Fiber Laser Wavelength: 1550 nm　Pulse Width: <100 fs Repetition Rate: 80 MHz　Power: >90 mW

System Configuration

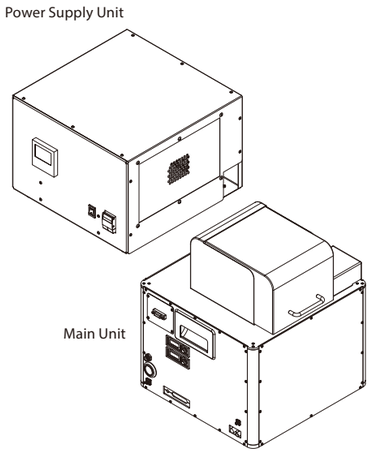

Dimensions

Main Unit

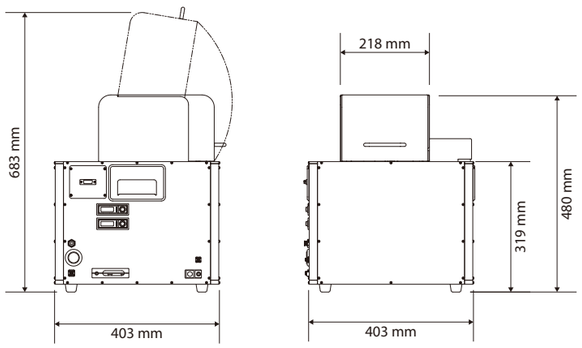

Power Supply Unit

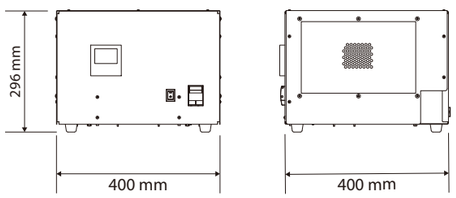



Terahertz Spectroscopy Measurement Service

We offer measurement services of liquid samples, allowing customers to evaluate THz liquid measurement using MiMoi 1.5. Measurements are performed using our proprietary MiMoi CELL.
For more information, please do not hesitate to contact us. You can find the contact details below.

S-TAKAYA ELECTRONICS INDUSTRY CO., LTD.
Headquarters：3121-1 Satomi, Satosho-cho, Asakuchi-gun,
Okayama Prefecture 719-0301, Japan
TEL : (+81) 865-64-4131　FAX : (+81) 865-64-4474
https://www.s-takaya.co.jp

"MiMoi" is a registered trademark of S-TAKAYA ELECTRONICS INDUSTRY CO., LTD. (Registration No. 6034122).



STAKAYA

Terahertz Time-Domain Spectroscopy
System for Liquid and Solid Samples

MiMoi®

[ミ モ イ]

1.5

Robustness × User Friendly
A Next-Generation Analytical Platform for THz Spectroscopy

- Robust optical design with no user alignment required
- High-speed scanner for fast data acquisition
- Disposable cell for a streamlined workflow from sample preparation to measurement
- Automated measurement sequences
- Compact desktop footprint

No Cleaning Required.
Reduced Cross-Contamination Risk.
MiMoi CELL Accelerates Your Research.

Research and development require the efficient acquisition of high-quality data. With its cleaning-free disposable design, MiMoi CELL helps reduce the risk of cross-contamination between samples. Eliminating the cleaning step improves overall workflow efficiency.

Approximately 50 µL of liquid is sufficient for measurement, making the cell suitable for small-volume samples. Low cell-to-cell variation in liquid layer thickness contributes to reproducible spectroscopic analysis across multiple samples.

The premium model, MiMoi CELL Premium Plus, includes liquid layer and COP plate thickness data. These data can also be used to derive the complex refractive index and complex permittivity.

*MiMoi CELL is sold separately from MiMoi1.5.



High-Precision Disposable Liquid Cells

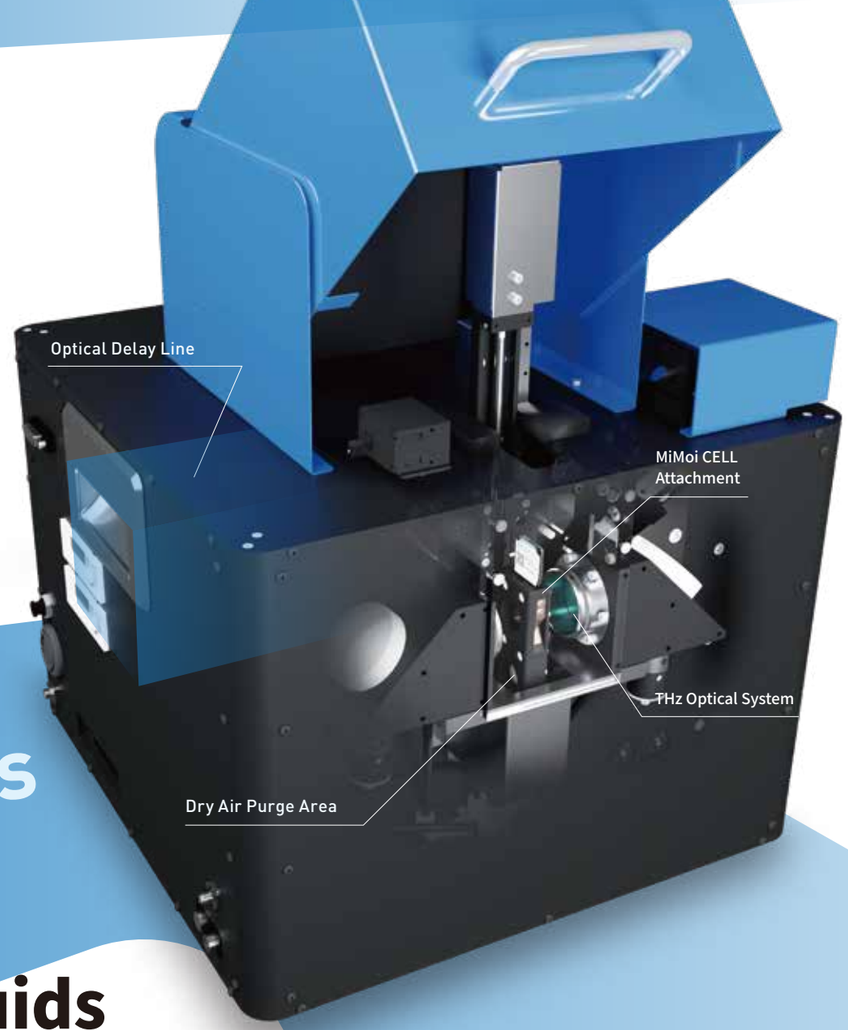



Real-Time Analysis and Automated Measurements for Tracking Changes Over Time

The dedicated software calculates and displays transmittance and absorbance in real time.

Following a preset sequence, the software can automatically perform repeated measurements under the same conditions, either continuously or intermittently at specified time intervals.

This makes it possible to record and track time-dependent changes in liquid samples caused by evaporation, sedimentation, chemical reactions, and other processes. These capabilities open up new possibilities for observing how liquid samples change over time.

THz Spectroscopy for Liquids Toward the Next Stage in R&D

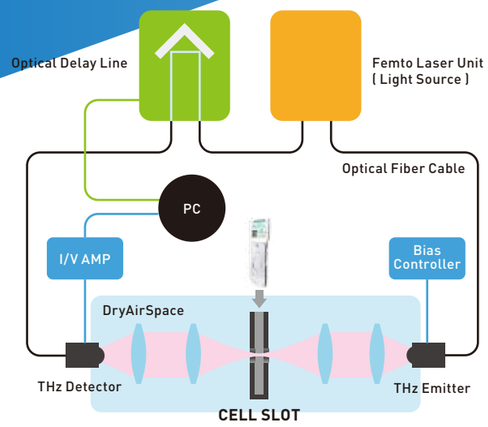

Robust THz Optical System Compact Footprint and Stable Measurement Performance

A compact lens-based optical unit enables THz transmission measurements in a desktop-sized system.

The optical system is designed to minimize noise while enhancing sensitivity within a compact footprint.

The resulting clear signals help detect subtle changes in liquid samples and support precise analysis in research and development.



Simple Steps to Liquid Measurement



Aspirate 50 µL with a micropipette

Dispense the sample into MiMoi CELL

Insert the MiMoi CELL directly into the system slot.

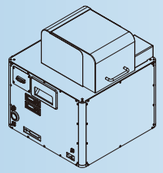

MiMoi 1.5: Customizable Concept Model

To respond to researchers' desire to explore, we offer system customization tailored to individual measurement needs, including attachments for transmission measurements of solid samples. We also welcome collaborative research.

Robust THz Optical System